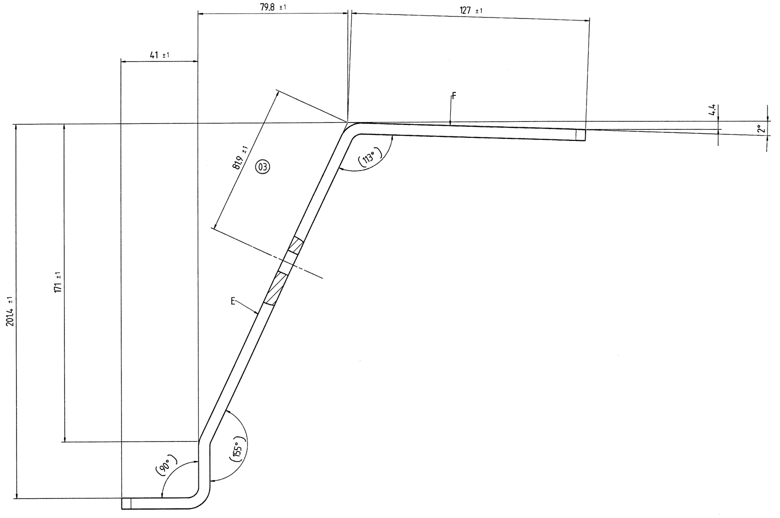

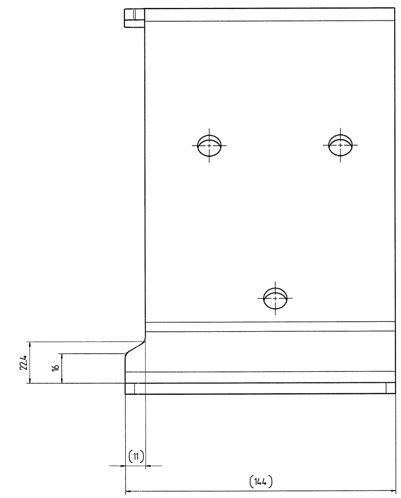

View following F

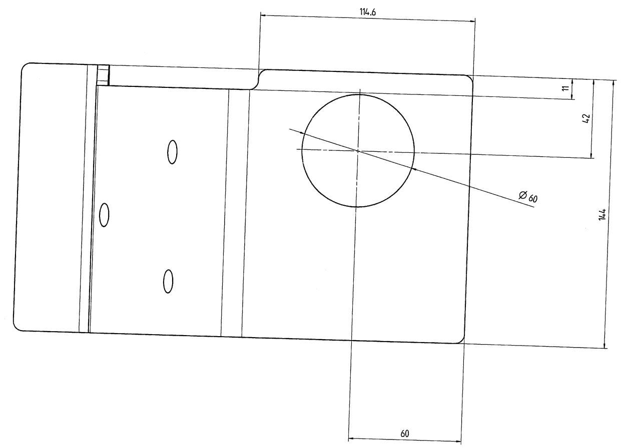

View following E

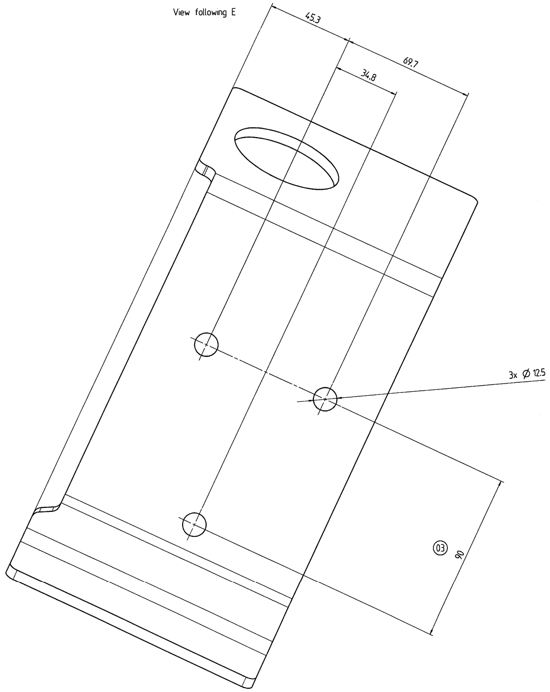

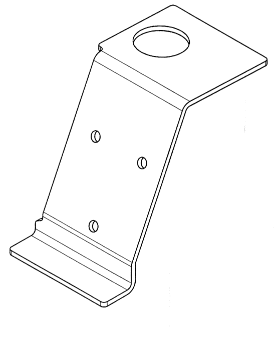

PŘEKLAD
dne: 17. 12. 2014
PROVEDL/A
Višňa

TLOUŠŤKA MAT.

TLOUŠŤKA MAT.
NEKÓT. RADIUSY
RADIUS OHYBU
DÉLKA ROZVINU

- 2 -03- 2015
ARCHIV
2

NOTA :

- Metal sheet thickness : 6 mm
- Radii without dimension : R = 5
- Bend radii : R = 6
- Unfolded length (for info) = /

FL00132.prt

✓ NZ 14/01402

Condition at time of delivery	
de-scaled (degree of purity SA 2 1/2 acc. ISO 8501-1)	X
without burrs acc. WN 11310	
Permissible top-end rounding during flame cutting (also positive bead acc. WN 10572)	
oil-free / free of grease	
oiled	
oiling permissible	X
Indicate the required condition at time of delivery with an X.	

(03)

LASER cutting tolerances				
NOTA : min cutting radius without dimensions R = 1 mm unless otherwise specified				
≤ 30	30< ≤ 120	120< ≤ 400	400< ≤ 1000	1000 <
± 0,5	± 0,8	± 1,0	± 1,5	± 2,0

+0,5 / -0,5

First angle projection

General tolerance (GT) in mm

Size range	≤ 30	> 30 ≤ 120	> 120 ≤ 400	> 400 ≤ 1000	> 1000
GT coarse					
L	1	2	2	3	4
◁	1	2	4	6	

Lengths (L) and angle (⊥ ∠)= ± GT

Tolerance Symbols ISO 1101
- ○ roundness = 1/2ø-Tol.
- — ▱ straightness/flatness = GT
- ◎ ↗ concentricity/run out = GT
- ⌯ symmetry = GT
- // parallelism = GT
- ⊕ position = GT

Languages: en,fr

Index	alteration	Change no	Fit	Toler.
03	Oiled --> Oiled permissible Dim. 51,9 --> 81,9 / Dim. 95 --> 90	T48720		

Inspection dim. ⬭
Auxiliary dim. ( )

	Date	Name
Drawn	8.1.2014	J.Fonteny
Checked	8.1.2014	F.Proust
Auth'd	9.1.2014	R.Pelletier
M.check.	14.1.2014	J.LeCesne

Material: S235JR following EN10025-2
Blank no:
Weight: in kg 2,3

Title: support
cabin left

PROD.
Scale 1:1

Drawing number
/
/
11914010909

Sheet: 1 of: 1

Confidential document
Refer to protection notice ISO 16016

Repl.
Orig.

Released
11914010909d001
A0